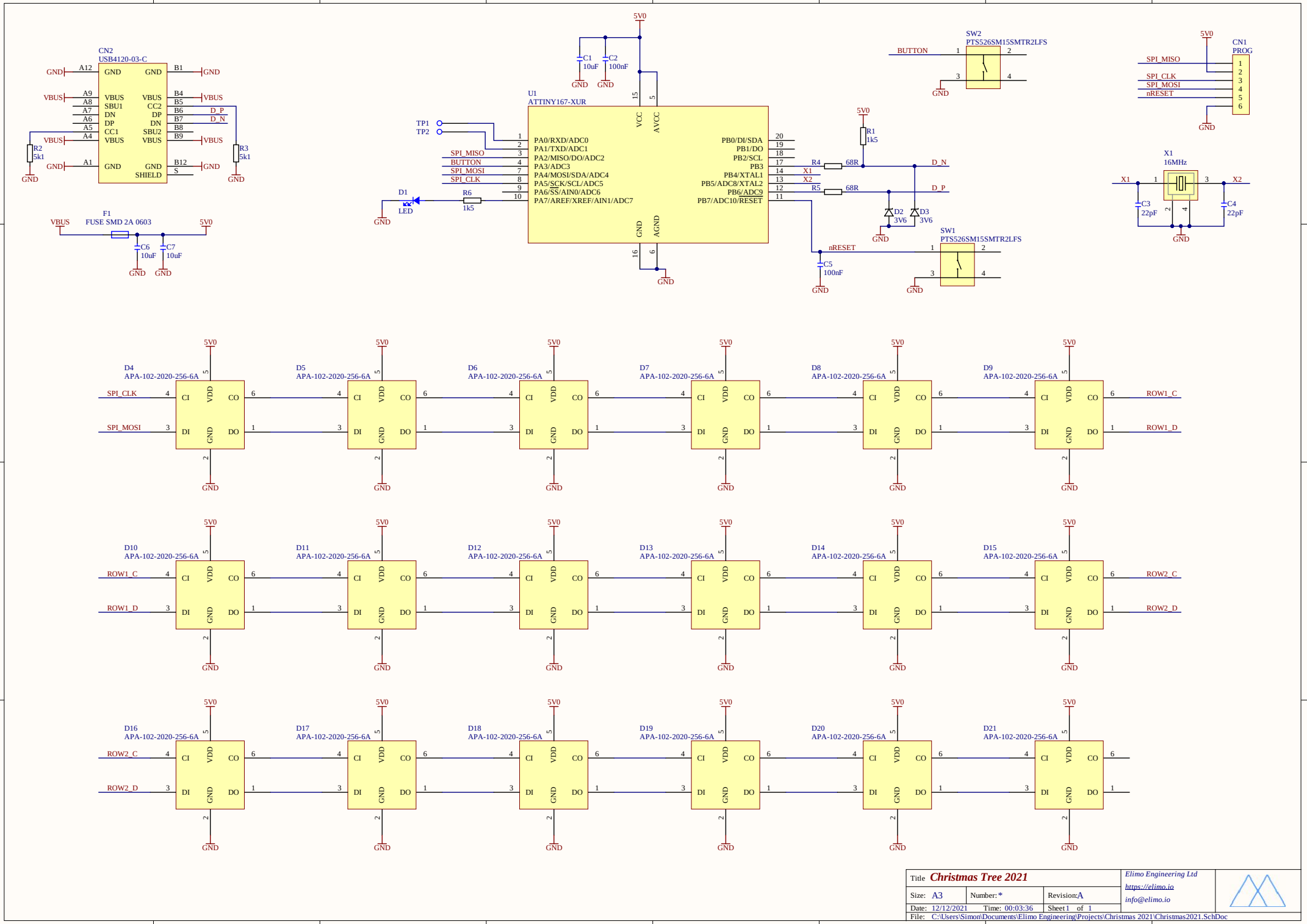
CN2
USB4120-03-C
U1
ATTINY167-XUR
SW2
PTS526SM15SMTR2LFS
SW1
PTS526SM15SMTR2LFS
CN1
PROG
X1
16MHz
F1
FUSE SMD 2A 0603
D1
LED
R1
1k5
R2
5k1
R3
5k1
R4
68R
R5
68R
R6
1k5
D2
3V6
D3
3V6
C1
10uF
C2
100nF
C3
22pF
C4
22pF
C5
100nF
C6
10uF
C7
10uF
D4
APA-102-2020-256-6A
D5
APA-102-2020-256-6A
D6
APA-102-2020-256-6A
D7
APA-102-2020-256-6A
D8
APA-102-2020-256-6A
D9
APA-102-2020-256-6A
D10
APA-102-2020-256-6A
D11
APA-102-2020-256-6A
D12
APA-102-2020-256-6A
D13
APA-102-2020-256-6A
D14
APA-102-2020-256-6A
D15
APA-102-2020-256-6A
D16
APA-102-2020-256-6A
D17
APA-102-2020-256-6A
D18
APA-102-2020-256-6A
D19
APA-102-2020-256-6A
D20
APA-102-2020-256-6A
D21
APA-102-2020-256-6A
5V0
GND
VBUS
SPI_MISO
SPI_CLK
SPI_MOSI
BUTTON
nRESET
D_P
D_N
ROW1_C
ROW1_D
ROW2_C
ROW2_D
TP1
TP2
Title Christmas Tree 2021
Size: A3
Number: *
Revision: A
Date: 12/12/2021
Time: 00:03:36
Sheet 1 of 1
File: C:\Users\Simon\Documents\Elimo Engineering\Projects\Christmas 2021\Christmas2021.SchDoc
Elimo Engineering Ltd
https://elimo.io
info@elimo.io